UNIVERSITI TEKNOLOGI MALAYSIA

www.utm.my

SCSR1013 DIGITAL LOGIC

MODULE 4a: BOOLEAN ALGEBRA

FACULTY OF COMPUTING

Introduction to Boolean Algebra

- It is the set of rules used to simplify a given logic expression without changing its functionality.
- Example: $F = \bar{A}B + BC + ABC$

be minimized

$F = \bar{A}B + BC$

- It is used when number of variables are less, i.e., 1, 2 or 3 vars.

Boolean Operations & Expressions

- **Variable**
  - A symbol that represents a logical quantity
  - Usually italic uppercase (*A*, *B*, *C*, *D*)
  - A single variable can have a 1 or 0 value

- **Complement**
  - The inverse of a variable
  - Indicated by an overbar $(\overline{A})$ or prime (A')
  - If $A = 1$, then $\overline{A} = 0$

- **Literal**

  = both variable and its complement in a term

  $\overline{A} + B + C$ → 3 literals

Example:

$$f = x'y' + x'y$$

Total Number of Literals = 4 which are x', y', x' and y

Total Number of variables = 2 which are x and y

Total Number of terms = 2 which are $x'y'$ and $x'y$

Laws & Rules of Boolean Algebra

- Basic laws of BA
  - Commutative Laws
    - For addition and multiplication
  - Associative Laws
    - For addition and multiplication
  - Distributive Laws

Commutative Laws

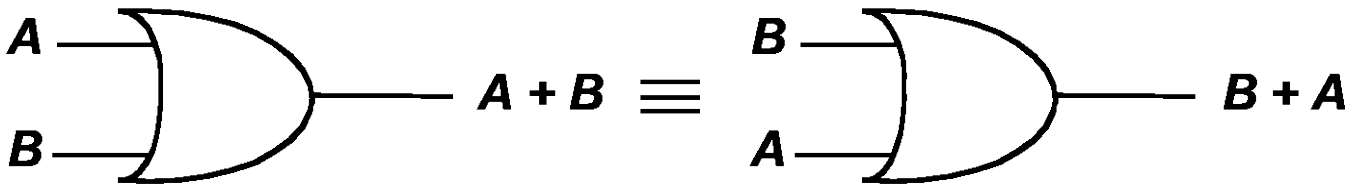

Commutative law of addition

- $A + B = B + A$
  - the order in which the variables are OR-ed makes no difference
  - in logic circuits, addition and the OR operation are the same.

Commutative Laws

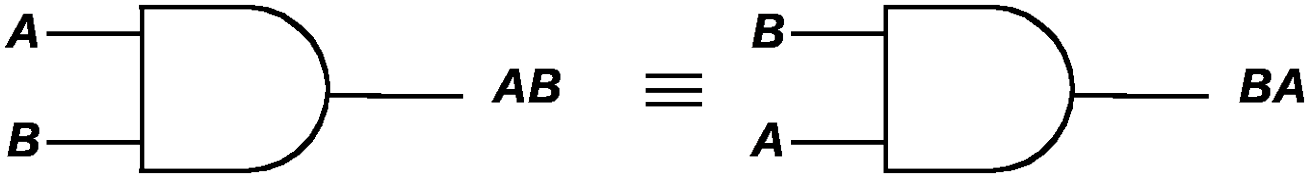

Commutative law of multiplication

- $AB = BA$
  - the order in which the variables are AND-ed makes no difference
  - in logic circuits, multiplication and the AND operation are the same.

Associative Laws

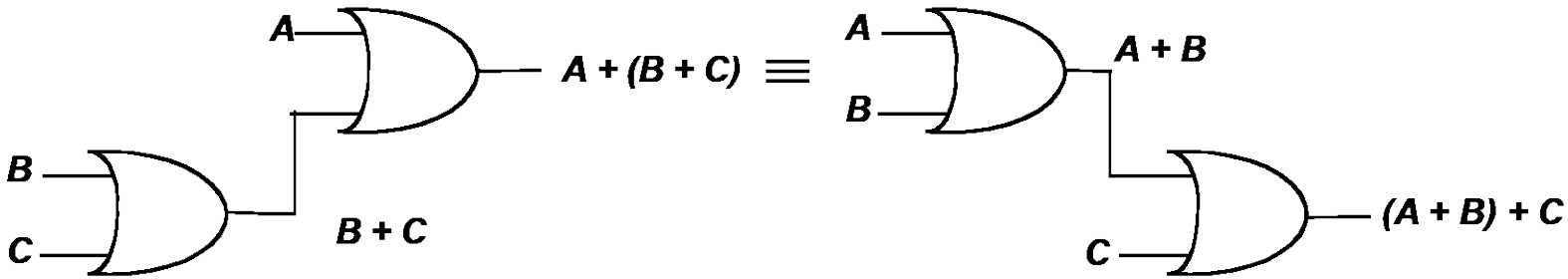

Associative law of addition

- $A + (B + C) = (A + B) + C$
  - the grouping in which the variables are OR-ed makes no difference

Associative Laws

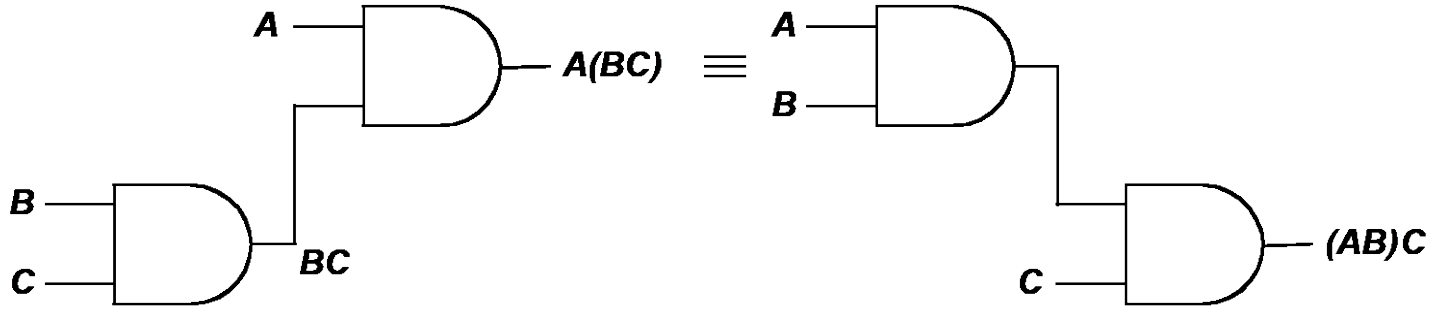

Associative law of multiplication

- *A(BC) = (AB)C*
  - the grouping in which the variables are AND-ed makes no difference

Proof

Exercise 4a.1:

Prove the Associate Law for A(BC) = (AB)C using truth table.

A	B	C	AB	BC	A(BC)	(AB)C
0	0	0	0	0	0	0
0	0	1	0	0	0	0
0	1	0	0	0	0	0
0	1	1	0	1	0	0
1	0	0	0	0	0	0
1	0	1	0	0	0	0
1	1	0	1	0	0	0
1	1	1	1	1	1	1

Distributive Laws

- $A(B + C) = AB + AC$
  - expresses the process of factoring, variable A is factored out of the product terms, like **A**B + **A**C = **A**(B+C)
  - … **A** is factored to the **(B + C)**

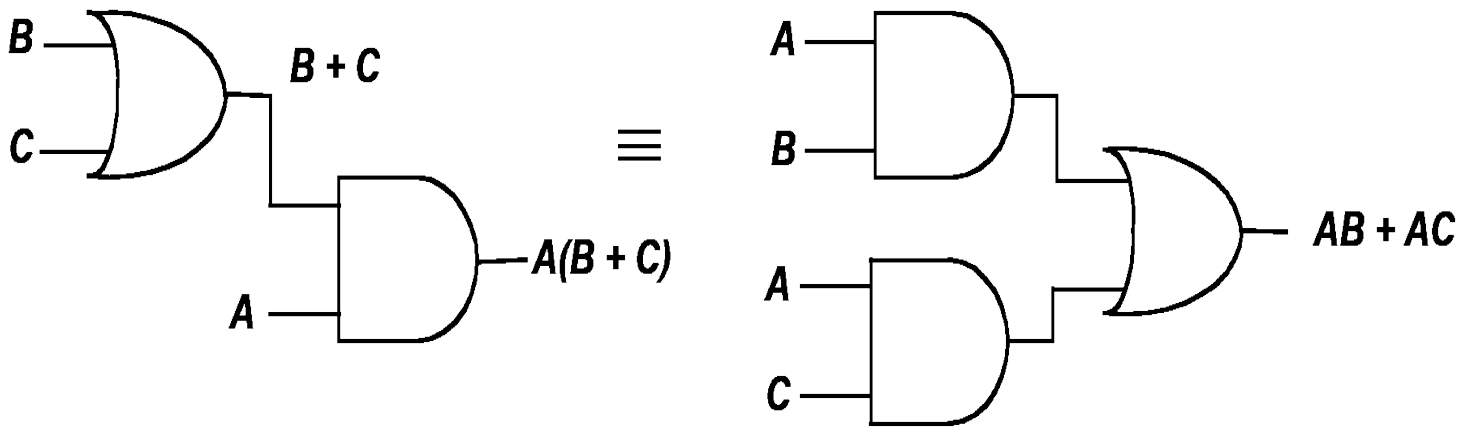

Why we have this ???

- want to simplify the Boolean equation
- thus we have simple circuit
- then reduce cost of production !

Rules of Boolean Algebra

1	$A + 0 = A$
2	$A + 1 = 1$
3	$A \bullet 0 = 0$
4	$A \bullet 1 = A$
5	$A + A = A$
6	$A + \overline{A} = 1$
7	$A \bullet A = A$
8	$A \bullet \overline{A} = 0$
9	$\overline{\overline{A}} = A$
10	$A + AB = A$
11	$A + \overline{A}B = A + B$
12	$(A + B)(A + C) = A + BC$

1 The rules can be proven by using truth table.

Rule 10

A	B	AB	$A + AB$
0	0	0	0
0	1	0	0
1	0	0	1
1	1	1	1

equal

Rules of Boolean Algebra

2 The rules can be proven by using Boolean algebra laws and rules.

Rule 10:

$A + AB = A(1 + B)$	Factoring (distributive law)
$= A \,.\, 1$	Rule 2: (1 + B) = 1
$= A$	Rule 4: A . 1 = A

1	$A + 0 = A$
2	$A + 1 = 1$
3	$A \bullet 0 = 0$
4	$A \bullet 1 = A$
5	$A + A = A$
6	$A + \overline{A} = 1$
7	$A \bullet A = A$
8	$A \bullet \overline{A} = 0$
9	$\overline{\overline{A}} = A$
10	$A + AB = A$
11	$A + \overline{A}B = A + B$
12	$(A + B)(A + C) = A + BC$

Rules of Boolean Algebra: PROOF

1	$A + 0 = A$

Rule 1:

$$X = A + 0 = A$$

A *variable* OR-ed with 0 is always equal to the *variable*.

continue...

Rules of Boolean Algebra: PROOF

2	$A + 1 = 1$

Rule 2:

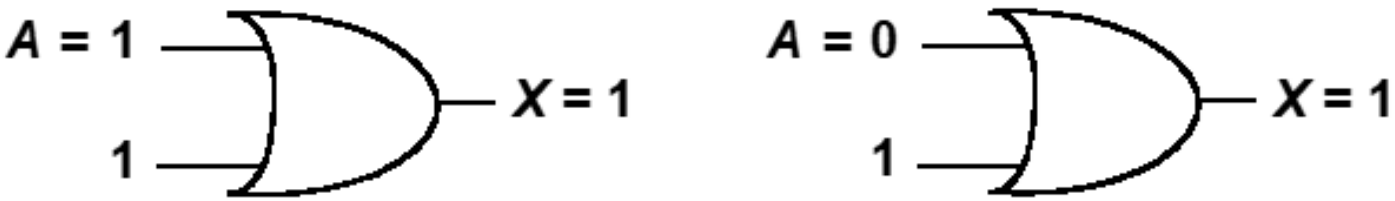

$$X = A + 1 = 1$$

A *variable* OR-ed with 1 is always equal to the **1**.

continue...

3	$A \bullet 0 = 0$

Rule 3:

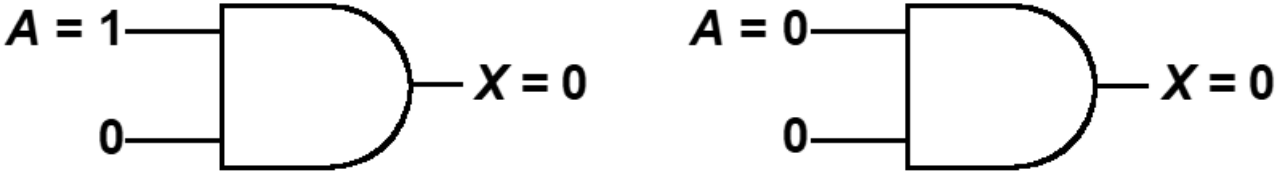

$$X = A \bullet 0 = 0$$

A *variable* AND-ed with 0 is always equal to 0.

continue...

4	$A \bullet 1 = A$

Rule 4:

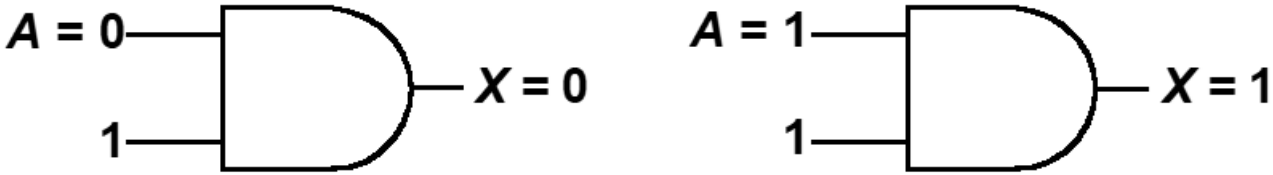

$$X = A \bullet 1 = A$$

A *variable* AND-ed with 1 is always equal to *variable*.

continue...

5	$A + A = A$

Rule 5:

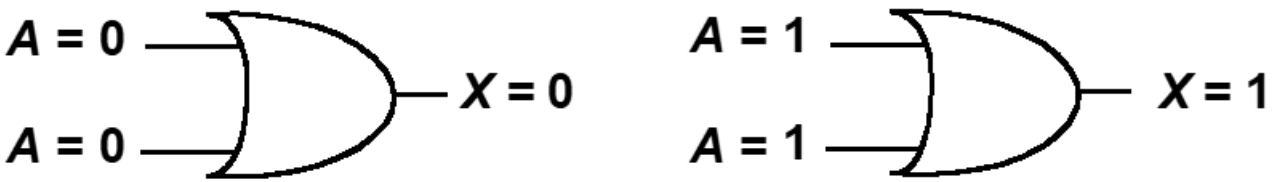

$$X = A + A = A$$

A *variable* OR-ed with itself is always equal to the *variable*.

continue...

6	$A + \overline{A} = 1$

Rule 6:

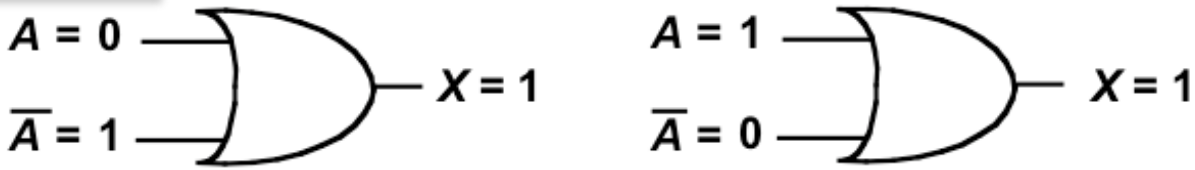

$$X = A + \overline{A} = 1$$

A *variable* OR-ed with its *complement* is always equal to 1.

continue...

7	$A \bullet A = A$

Rule 7:

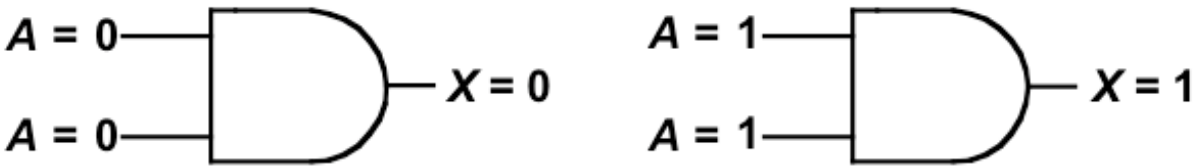

$X = A \bullet A = A$

A *variable* AND-ed with itself is always equal to the *variable*.

continue…

8	$A \bullet \overline{A} = 0$

Rule 8:

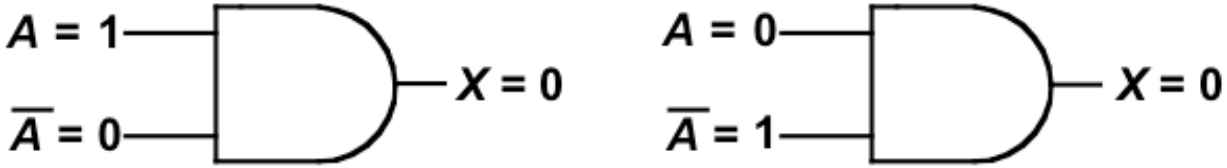

$$X = A \bullet \overline{A} = 0$$

A *variable* AND-ed with *its complement* is always equal to 0

continue…

9	$\overline{\overline{A}} = A$

Rule 9:

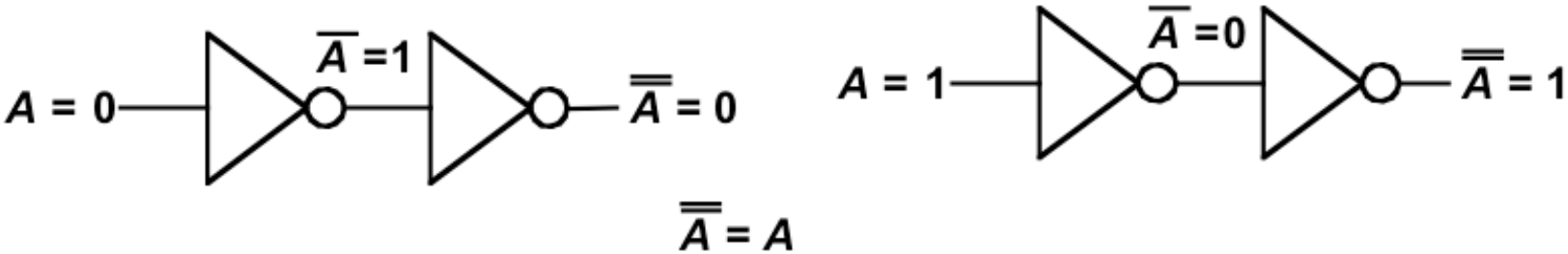

$\overline{\overline{A}} = A$

The *double complement* of a variable is always equal to the *variable*

continue…

Rules 10, 11, and 12 can be proven by using Boolean algebra laws.

10	$A + AB = A$

Rule 10:

$A + AB = A(1 + B)$	Factoring (distributive law)
$= A \,.\, 1$	Rule 2: (1 + B) = 1
$= A$	Rule 4: A . 1 = A

continue...

Rules 10, 11, and 12 can be proven by using Boolean algebra laws.

11	$A + \bar{A}B = A + B$

Rule 11:

$A + \bar{A}B = (A + AB) + \bar{A}B$	Rule 10: A = A + AB
$= (AA + AB) + \bar{A}B$	Rule 7: A = AA
$= AA + AB + A\bar{A} + \bar{A}B$	Rule 8: adding $A\bar{A} = 0$
$= (A + \bar{A})(A + B)$	Factoring
$= 1 \,.\, (A + B)$	Rule 6: $A + \bar{A} = 1$
$= A + B$	Rule 4: drop the 1

continue...

Rules 10, 11, and 12 can be proven by using Boolean algebra laws.

12	$(A + B)(A + C) = A + BC$

Rule 12:

$(A + B)(A + C) = AA + AC + AB + BC$	Distributive law
$= A + AC + AB + BC$	Rule 7: AA = A
$= A(1 + C) + AB + BC$	Factoring (distributive law)
$= A \,.\, 1 + AB + BC$	Rule 2: 1 + C = 1
$= A(1 + B) + BC$	Factoring (distributive law)
$= A \,.\, 1 + BC$	Rule 2: 1 + B = 1
$= A + BC$	Rule 4: A . 1 = A

DeMorgan's Theorems

- To minimize the variety and number of logic gates IC.
- Provides mathematical verification for:
  - NAND ≡ negative-OR
  - NOR ≡ negative-AND

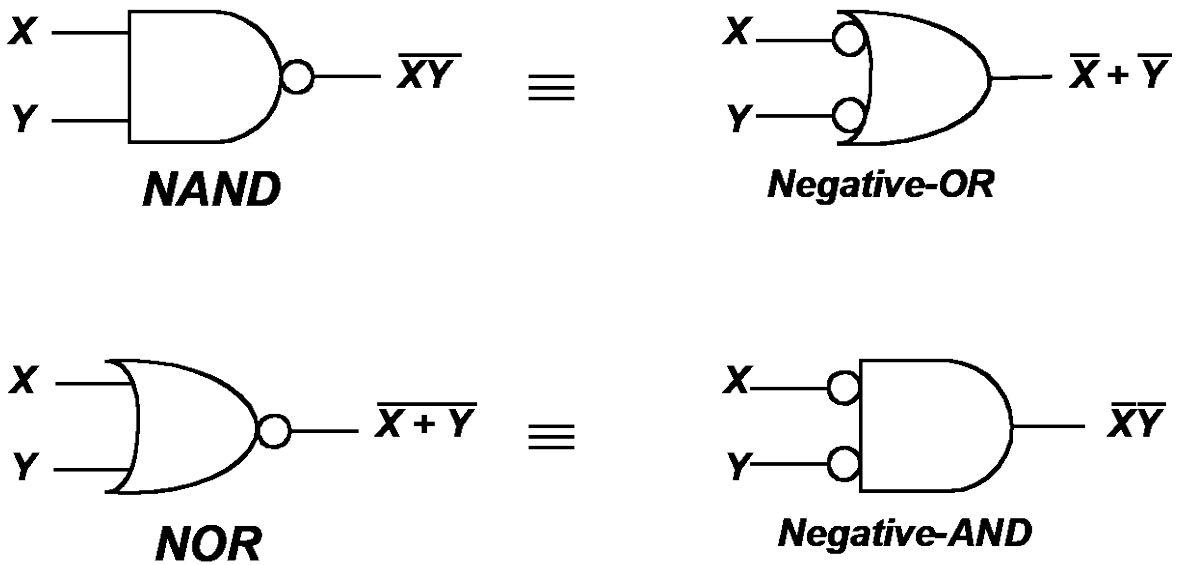

Truth Table Verification

A	B	A·B	(A·B)'	A'	B'	(A' + B')
0	0	0	1	1	1	1
0	1	0	1	1	0	1
1	0	0	1	0	1	1
1	1	1	0	0	0	0

- Both (A·B)' and (A' + B') produce identical outputs.

- DM theorem 1:
  - The complement of a product of variables is equal to the sum of the complements of the variables

$$\overline{XY} = \overline{X} + \overline{Y}$$

- DM theorem 2:
  - The complement of a sum of variables is equal to the product of the complements of the variables

$$\overline{X + Y} = \overline{X}\,\overline{Y}$$

DeMorgan's Theorems Application

Example of applying DeMorgan's Theorems.

DM theorem 1:

The complement of a product of variables is equal to the sum of the complements of the variables

$$\overline{XYZ} = \overline{X} + \overline{Y} + \overline{Z}$$

$$\overline{WXYZ} = \overline{W} + \overline{X} + \overline{Y} + \overline{Z}$$

DM theorem 2:

The complement of a sum of variables is equal to the product of the complements of the variables

DeMorgan's Theorem II

$$\overline{X + Y + Z} = \overline{X}\,\overline{Y}\,\overline{Z}$$

$$\overline{W + X + Y + Z} = \overline{W}\,\overline{X}\,\overline{Y}\,\overline{Z}$$

Example of applying DeMorgan's Theorems.

$$\overline{(AB + C)(A + BC)} = \overline{(AB + C)} + \overline{(A + BC)} \quad \text{(Theorem I)}$$

$$\overline{(AB + C)} + \overline{(A + BC)} = (\overline{AB})\overline{C} + \overline{A}(\overline{BC}) \quad \text{(Theorem II)}$$

$$= (\overline{A} + \overline{B})\overline{C} + \overline{A}(\overline{B} + \overline{C}) \quad \text{(Theorem I)}$$

(Theorem I)

$$\overline{XY} = \overline{X} + \overline{Y}$$

(Theorem II)

$$\overline{X + Y} = \overline{X}\,\overline{Y}$$

Excercise

Self-Test:

Prove that $\overline{AB}$ is **equal** or **not equal** with $\overline{A}\,\overline{B}$ by using the truth table.

Answer:

A	B	$\overline{A}$	$\overline{B}$	AB	$\overline{A}\,\overline{B}$	$\overline{AB}$

Home work

Exercise 4a.2:

Apply DeMorgan's theorems to each of the following expressions:

(a) $\overline{(A + B + C)D}$

(b) $\overline{ABC + DEF}$

(c) $\overline{A\overline{B} + \overline{C}D + EF}$

Combinational logic is a type of digital circuit where the output depends only on the present input values, not on any past input. There's no memory element inside.

Combinational Logic Representation

$$\overline{(AB + C)(A + BC)}$$

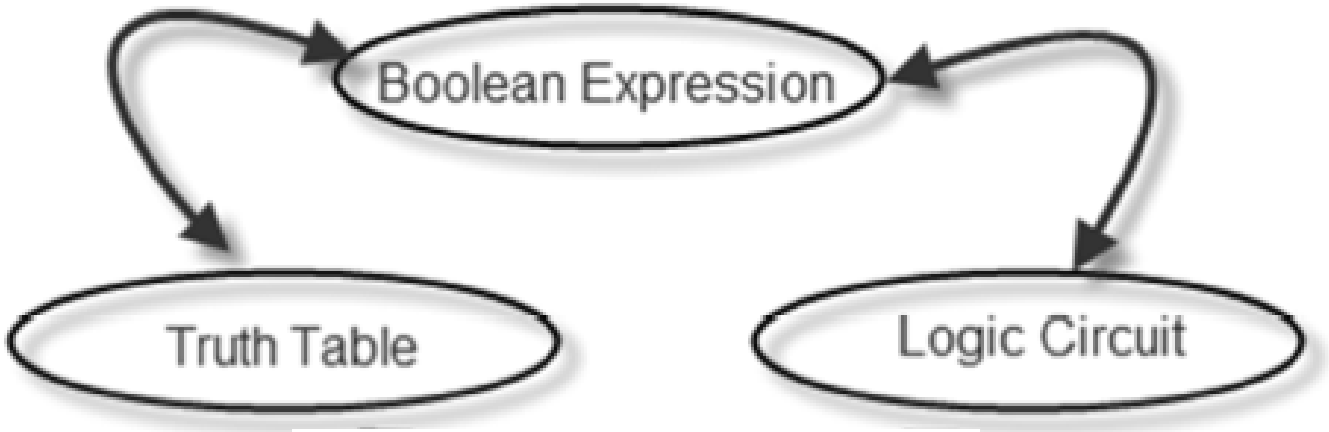

A	B	AB
0	0	0
0	1	0
1	0	0
1	1	1

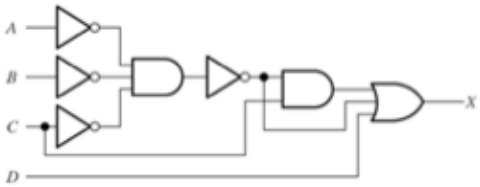

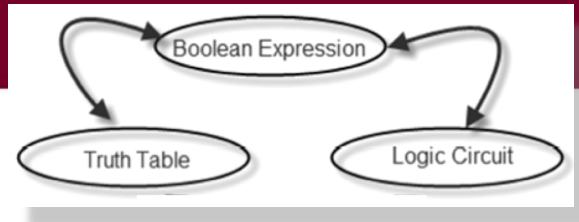

From Boolean Expression to Logic Circuit

- Treat a Boolean expression as if you try to solve a normal mathematical equation
- Just like a normal mathematic we have the precedence of operation
  - start with ( ) then multiplication (AND) then addition (OR)
  - Therefore to draw the circuit following the same sequence

Example: $X = A(BC + \overline{D}) = A \quad (BC + \overline{D})$

AND 4

$A \qquad (BC + \overline{D})$

OR 3

$BC \qquad \overline{D}$

NOT 2

AND 1

$B \qquad C \qquad D$

Logic circuit:

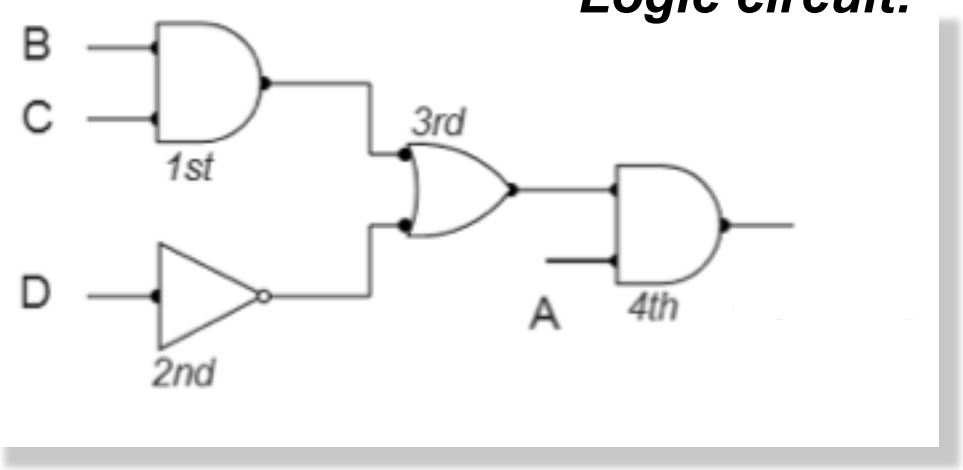

1 → 2 → 3 → 4

Home work

Exercise 4a.3:

Draw the logic circuit represented by each expression:

(i) $A\overline{B}+\overline{A}B$

(ii) $AB+\overline{A}\,\overline{B}+\overline{A}BC$

(iii) $\overline{A}B(C+\overline{D})$

Logic circuit to Boolean expression

- To derive the Boolean expression for a given circuit, follow left-to-right rule.
  - Begin from the left-most inputs and work towards the last.

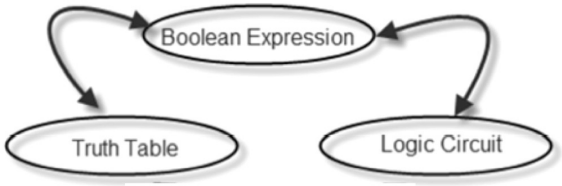

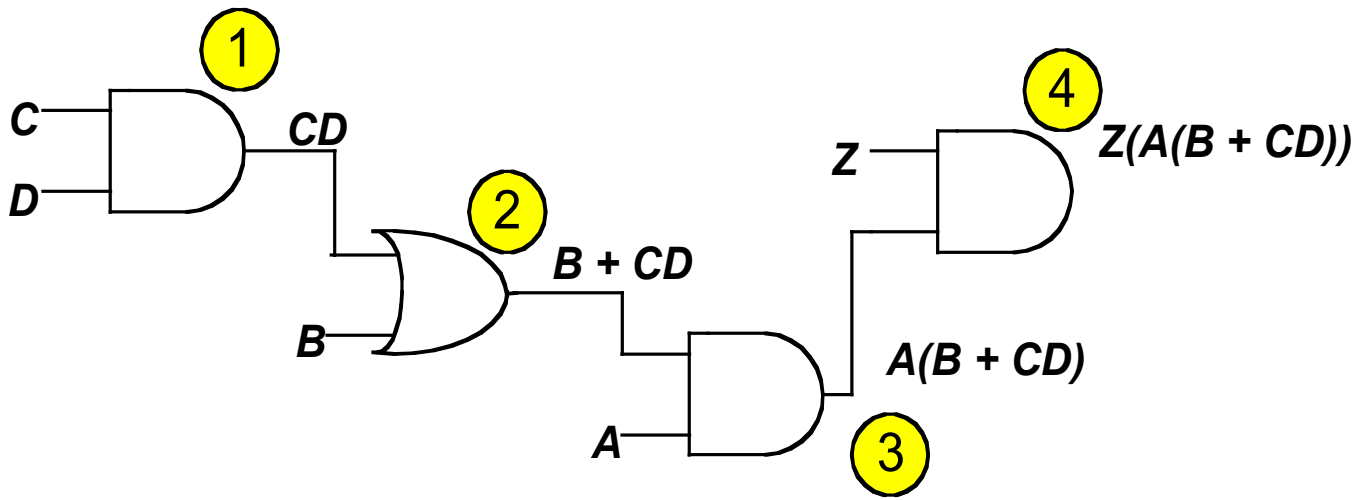

1 → 2 → 3 → 4

Home work

Exercise 4a.4:

Determine which of the logic circuits are equivalent.

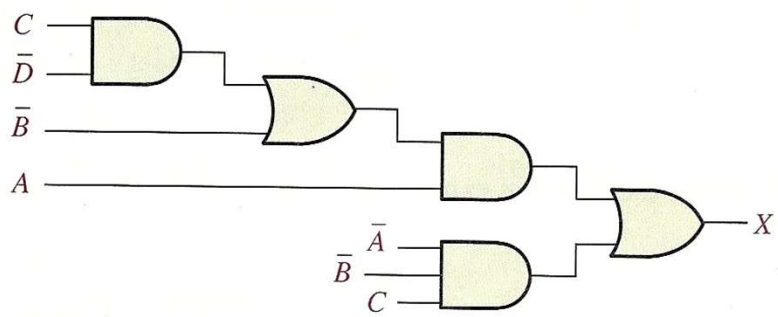

(a)

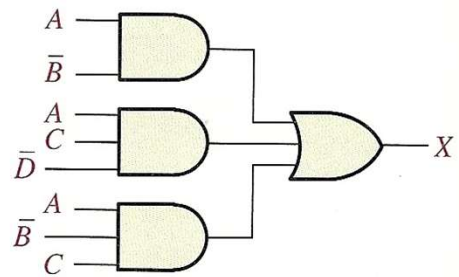

(b)

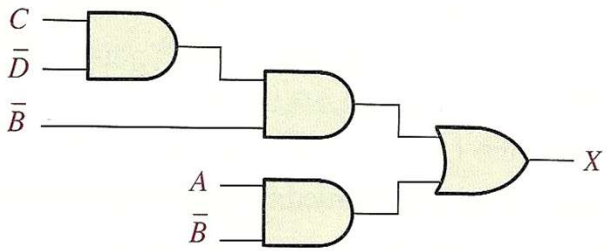

(c)

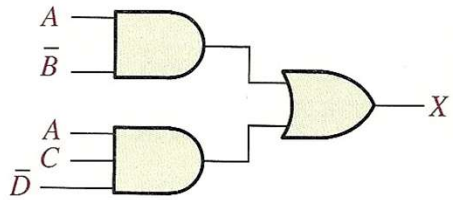

(d)

Boolean expression to truth table

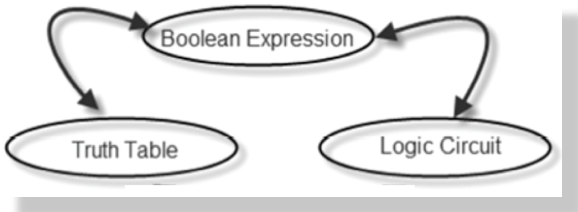

- A truth table shows the output for all possible input values.
- From a Boolean expression, a truth table can be developed.

x = number of input variables

Possible combinations of values, $n = 2^x$

- Example:

$F = A + B \rightarrow x = 2;\ n = 2^2 = 4$

Steps in construction a truth table

- **Step 1:** Identify x and n from the Boolean exp.

- **Step 2:** Find the values of the variables that make the expression equal to 1.

  (*Hint: use the rules for Boolean addition and multiplication*)

- **Step 3:** List in a table
  - all the n combinations of 1s and 0s (inputs)
  - the values of variables from step 2 (outputs=1)
  - all the other output values will be 0

Example: F = A + B

1. x = ?
   n = 2^x ?

2. Combination of inputs → F = 1

   A + B = 1

3. Fill in the table:

x=2, *n* = 4

INPUT		OUTPUT
A	B	F
0	0	
0	1	
1	0	
1	1	

UTM UNIVERSITI TEKNOLOGI MALAYSIA

Example: A(B + CD)

Step 1: $x = 4$; $n = 2^x = 2^4 = 16$

Step 2:

$A(B + CD) = 1 \bullet 1 = 1 \rightarrow A = 1$

What makes $B + CD = 1$?

$B + CD = 1 + 0 = 1$

$B + CD = 0 + 1 = 1$

$B + CD = 1 + 1 = 1 \rightarrow B = 1$ or 0

What makes $CD = 1$?

$CD = 1 . 1 = 1 \rightarrow C = 1;\ D = 1$

Therefore, the output of A(B + CD) will be 1 if

$A = 1, B = 1, C = 0/1, D = 1/0$

$A = 1, B = 0, C = 1, D = 1$

Step 3 : Fill in the table with results from Step 2

INPUTS				OUTPUT
A	B	C	D	A(B + CD)
0	0	0	0	0
0	0	0	1	0
0	0	1	0	0
0	0	1	1	0
0	1	0	0	0
0	1	0	1	0
0	1	1	0	0
0	1	1	1	0
1	0	0	0	0
1	0	0	1	0
1	0	1	0	0
1	0	1	1	1
1	1	0	0	1
1	1	0	1	1
1	1	1	0	1
1	1	1	1	1

Tips

- Tips on '**table-making**' :
  - For n possible combinations, the input part of the table will register the binary value of *0* to *n-1*.
  - (e.g. n=16; 0 to 15)
  - Remember the sequence

2^4	2^2	2^1	2^0	
8	4	2	1	
0	0	0	0	(0)
0	0	0	1	(1)
0	0	1	0	(2)
0	0	1	1	(3)

From Truth Table to Logic Circuit

Step 1: Get the product term from HIGH outputs 1

Step 2: From the product term get the expression

- This is done by OR-ing the product terms

$$X = \overline{A}BC + A\overline{B}\overline{C}$$

INPUTS A	B	C	OUTPUT X	PRODUCT TERM
0	0	0	0	
0	0	1	0	
0	1	0	0	
0	1	1	1	$\overline{A}BC$
1	0	0	1	$A\overline{B}\overline{C}$
1	0	1	0	
1	1	0	0	
1	1	1	0	

Step 3: Implement the circuit

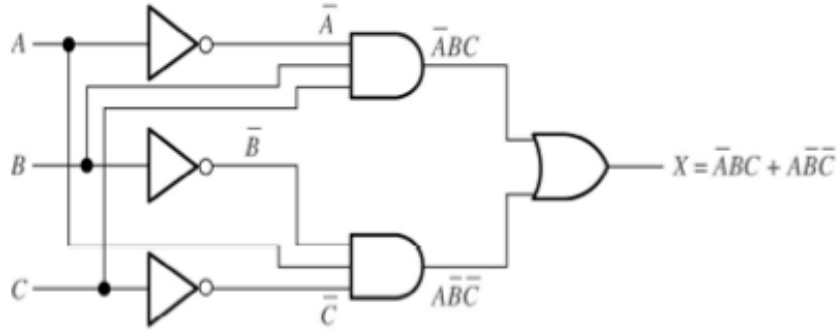

Example:

Given the truth table below, produce the logic circuit (Module v5: page 116).

INPUTS			OUTPUT
A	B	C	X
0	0	0	0
0	0	1	0
0	1	0	0
0	1	1	1
0	0	0	0
1	0	1	1
1	1	0	1
1	1	1	0

INPUTS			OUTPUT	PRODUCT TERM
A	B	C	X	
0	0	0	0	
0	0	1	0	
0	1	0	0	
0	1	1	1	$\bar{A}BC$
0	0	0	0	
1	0	1	1	$A\bar{B}C$
1	1	0	1	$AB\bar{C}$
1	1	1	0	

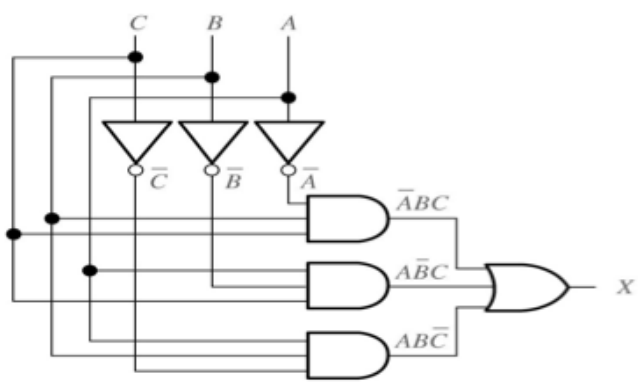

$$X = \bar{A}BC + A\bar{B}C + AB\bar{C}$$

Logic Circuit to Truth Table

- Requires 2 steps
  1. From circuit derive the Boolean expression of the output
  2. From Boolean expression produce a Truth Table

Both step has been mentioned

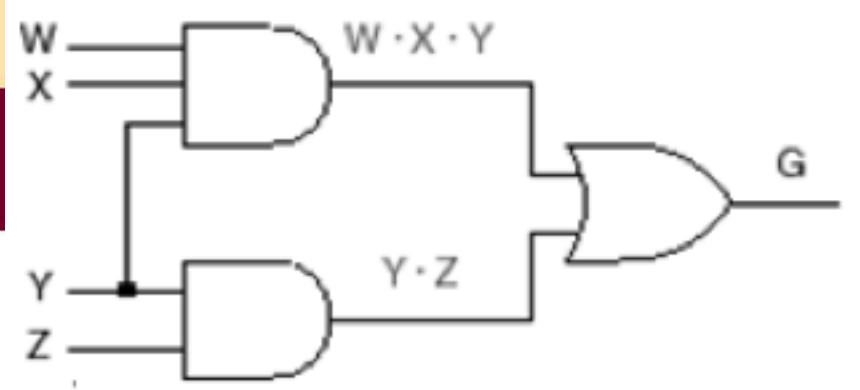

Example:

Produce a truth table from the above circuit.

Step1: derive the Boolean expression of the output , G = WXY + YZ

Step 2: from the expression produce the truth table

G will be 1 if either term = 1

term 1 which is WXY will only be 1 if W = 1, X = 1 and Y = 1

term2 which is YZ will only be 1 if Y =1 and Z = 1

W	X	Y	Z	G
0	0	0	0	0
0	0	0	1	0
0	0	1	0	0
0	0	1	1	1
0	1	0	0	0
0	1	0	1	0
0	1	1	0	0
0	1	1	1	1
1	0	0	0	0
1	0	0	1	0
1	0	1	0	0
1	0	1	1	1
1	1	0	0	0
1	1	0	1	0
1	1	1	0	1
1	1	1	1	1